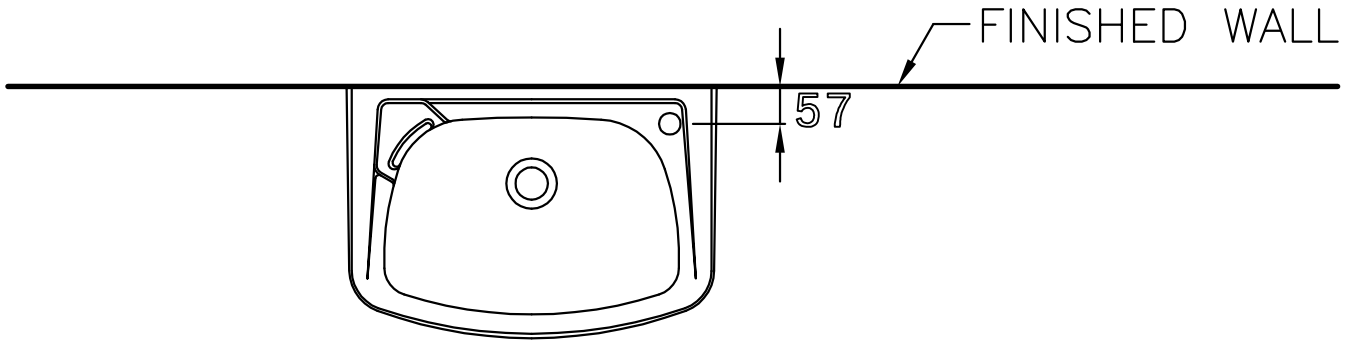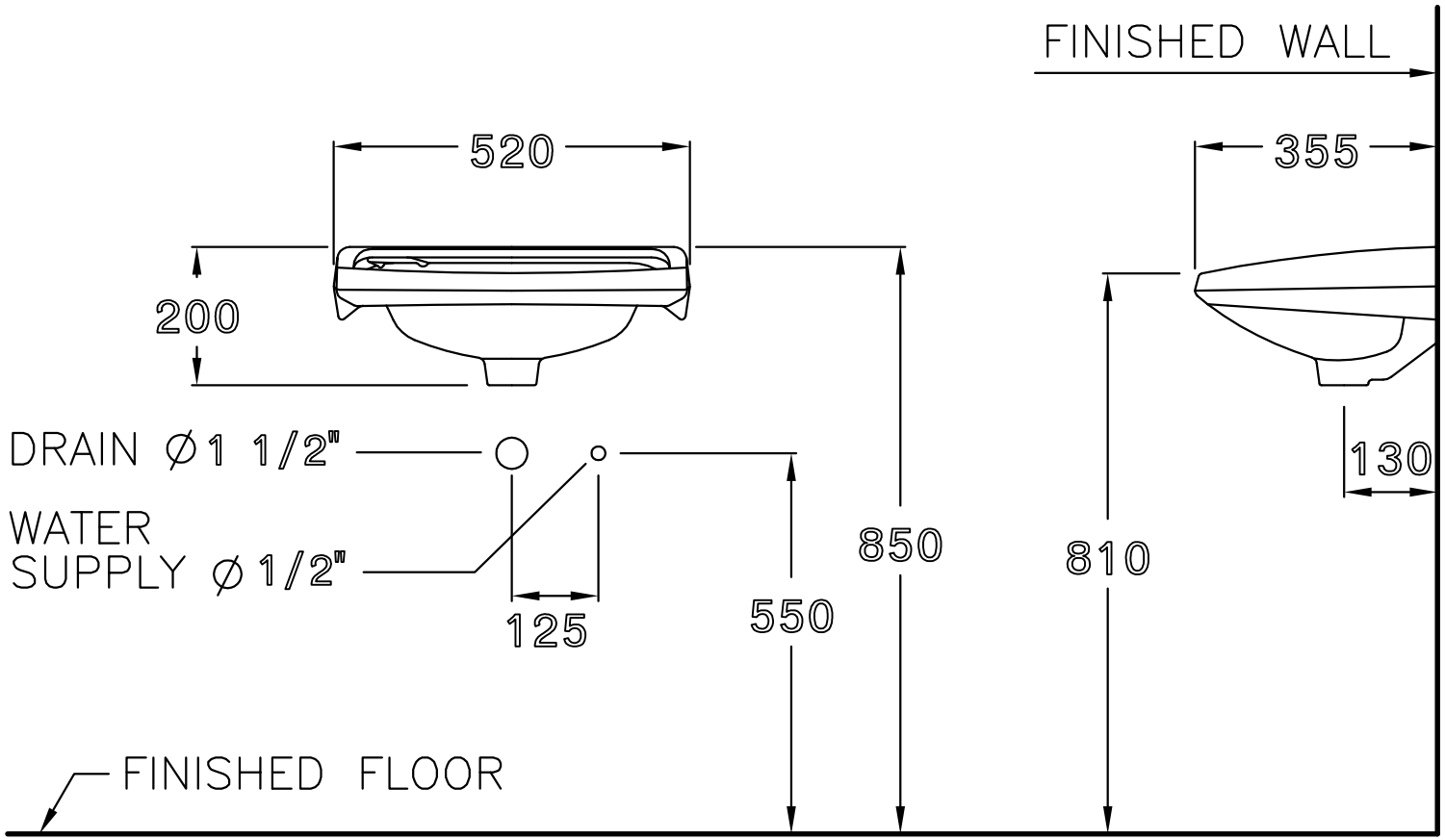DRAWING FOR CATALOG	
NAME	DOREX
CODE	C–002
DATE	02/03/55