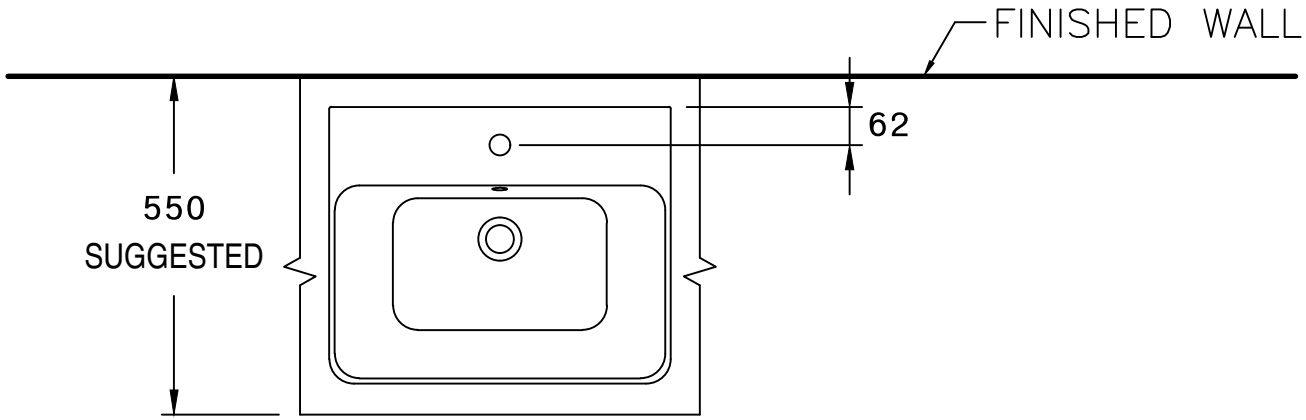
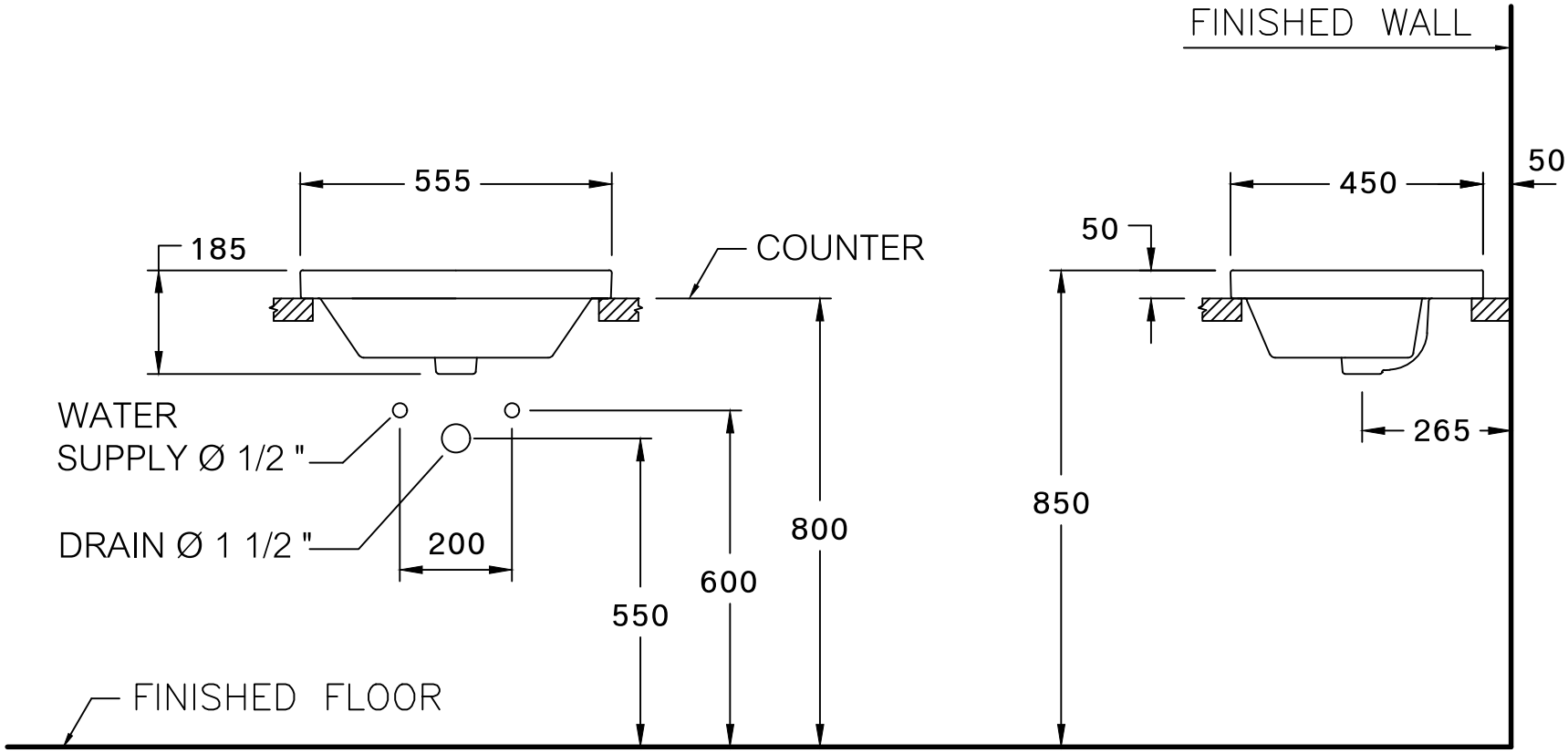
DRAWING FOR CATALOG	
NAME	Simply Modish With Faucet Basin
CODE	C-001057
DATE	27/10/59