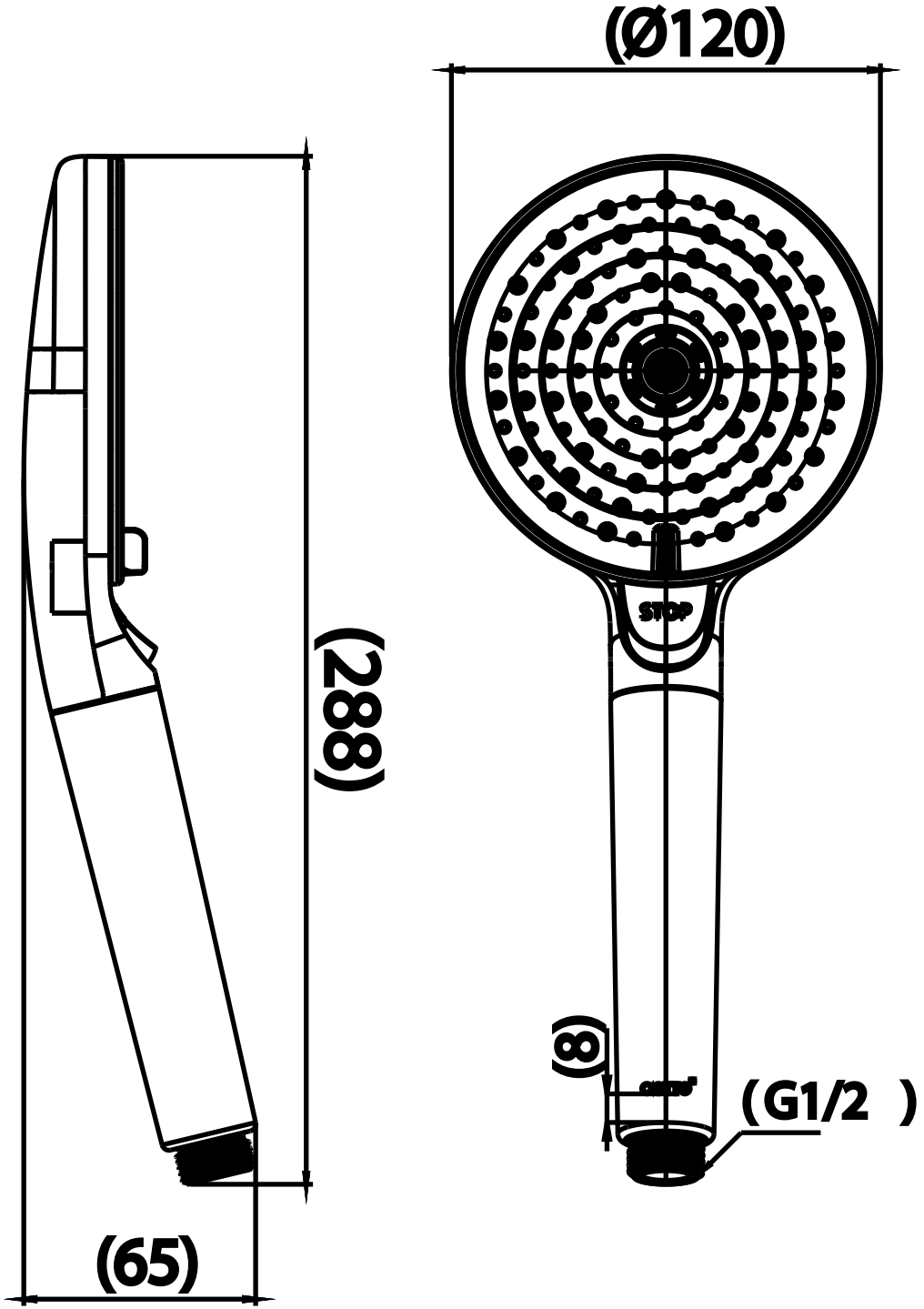

HAND SHOWER WITH FILTER

Z H 0 3 1 V (HM)