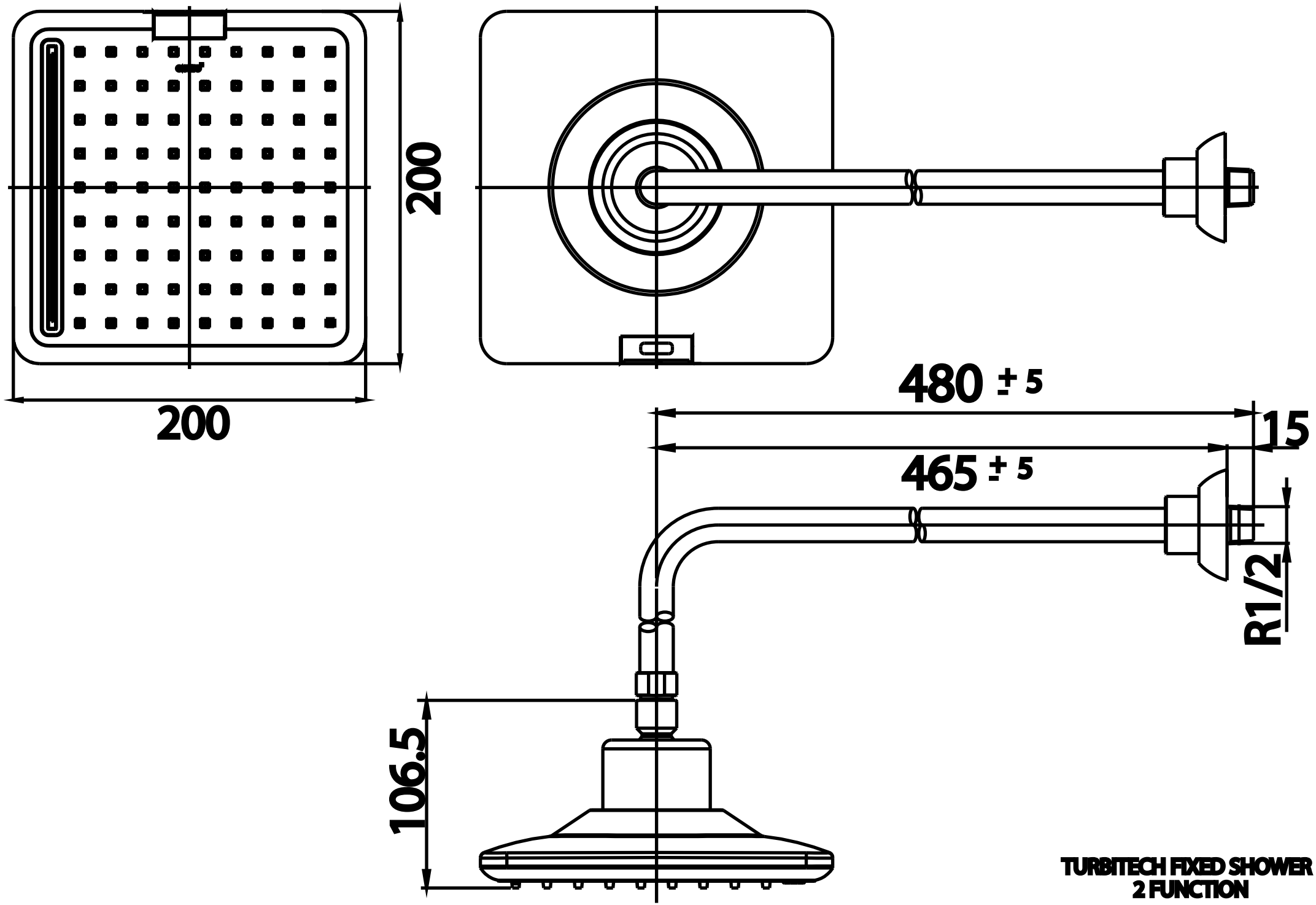

TURBITECH FIXED SHOWER
2 FUNCTION

ZF10